SPT199

HENAN SPT MACHINERY
EQUIPMENT CO., LTD.

Mini Crawler Crane (Spider Crane)

SPT Brand Spider Crane - Benchmarking
the World's Highest Standard

Intelligent, safe and more durable

SPT199

Max lifting height 6.6m

Working radius 5.93m

Capacity 2.0t×1.4m

Weight 1650kg

SPT199

Working Range Diagram Without Fly Jib

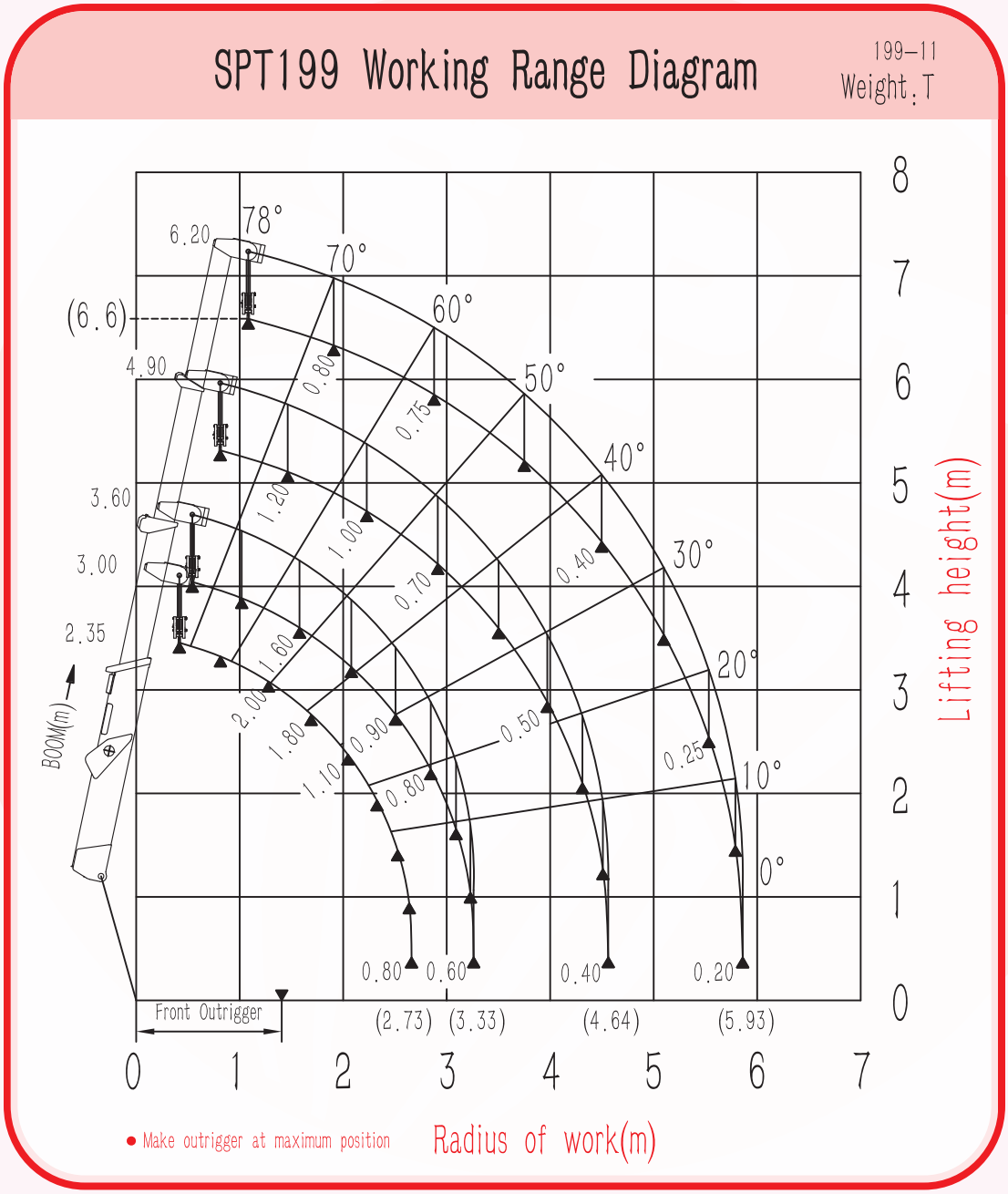

SPT199

Outrigger Footprints

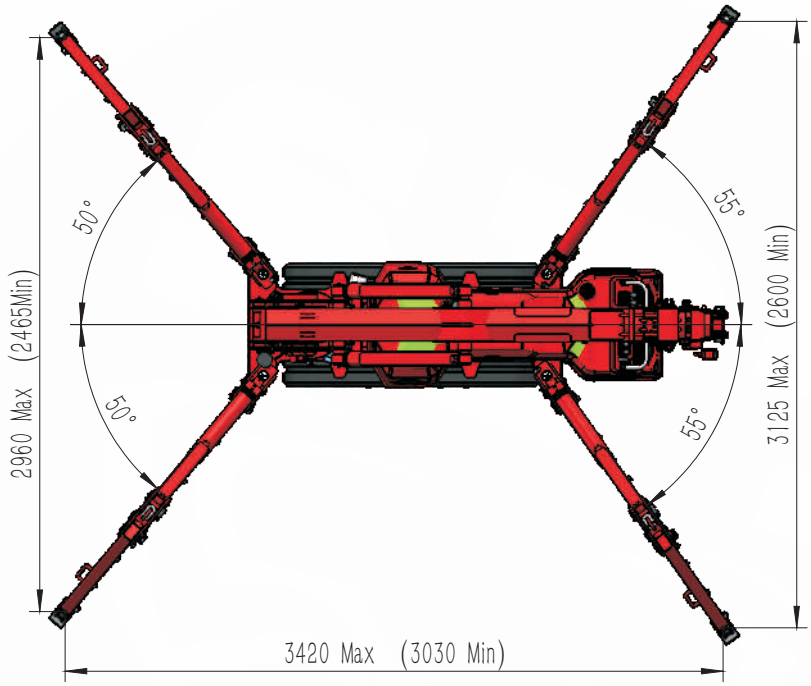

Dimensions

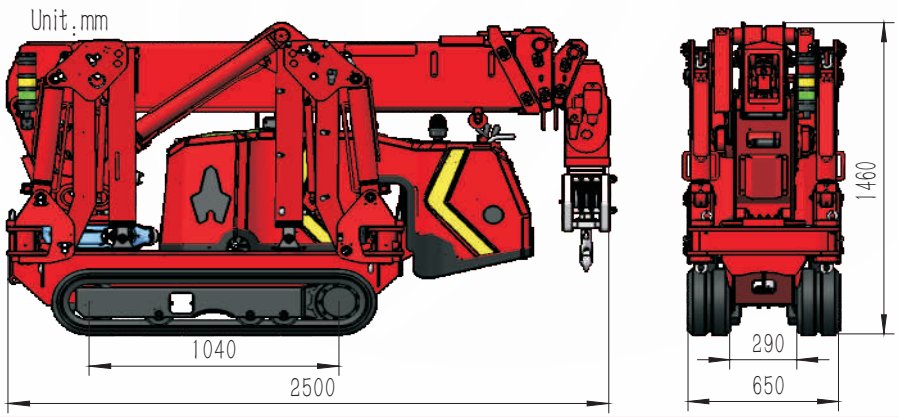

SPT199

Specifications

Model		SPT199
Capacity		2.0t × 1.4m
Working radius		5.93m × 0.20t
Ground lifting height		6.60m × 0.80t
Underground lifting height		10m–4 fall 20m–2 fall 40m–1 fall
Winch device	Hook speed	0–6m/min（4 fall）
	Rope type	Φ8mm × 45m
Telescopic system	Boom form	4 section boom, hexagonal box construction
	Boom length/Time	2.35m–6.20m/30sec
Up and downs	Boom angle/Time	0–78° /20sec
Slew system	Slew angle/Speed	0–360° （continuous）/60sec
Outrigger	Outrigger active form	Manual + Hydraulic
	Maximum extended dimensions（mm）	3420（Length）X2960（Front）X3125（Back）
Traction system	Walking way	Hydraulic motor drive
	Walking speed	0–2km/h
	Grade ability	20° （36%）
	Ground length × width	1040mm × 180 mm
	Ground pressure	43kpa（0.44kgf/cm^2）
Electric motor	Voltage	AC380V（Optional）
	Power/Speed	3kw/1440 min–1
	Sound level	Rated speed ≤75dB（A）（1m）
Diesel engine	Model	Kd440（KOHLER）
	Type/Displacement	Single cylinder air cooled/0.441L
	Rated output	8kw/3600 min–1
	Starting method	Electric
	Operating temperature	–5° C~40° C
	Fuel/Volume	Diesel/5L
	Battery capacity	12v 36AH
	Specific fuel consumption	240g/kW–h
	Sound Level	Rated speed ≤80dB（A）（7m）
	Applied regulation/Altitude	EPA–Tier4，EC stage V /1200m
Operate system	Type of operation	Wireless remote control and manual operation
	Operating characteristic	Full proportional control
Dimension	Length × Width × Height	2500mm × 650mm × 1460mm
Weight	（Without optional equipment）	1650kg
Standard configuration	Diesel engine, Electric motor, Radio remote control, Searcher hook, Black rubber track, Intelligent display screen, Moment limiter, Over hoist alarm and automatic stop device, Three–winding alarm and automatic stop device, Automatic hook stow, Outrigger position detector device, Outrigger off the ground alarm and automatic stop device, Slinging rope detachment protector, EMO switch, Three color lamp, Remote control lamp, Voice prompt, Walking/Outrigger/Boom three–mode interlock system, Data records	
Optional configuration	Glass suction, White rubber track, Manual fly jib, Single–man basket, Outrigger pads	

SPT199

Total rated load Outriggers at Maximum position(4fall)

2.35/3.00boom		3.60boom		4.90boom		6.20boom	
Working radius (m)	Total ratedload (t)	Working radius (m)	Total ratedload (t)	Working radius (m)	Total ratedload (t)	Working radius (m)	Total ratedload (t)
<1.40	2.00	<1.50	1.60	<2.00	1.20	<2.50	0.80
1.50	1.80	2.00	1.20	2.50	0.90	3.00	0.70
2.00	1.20	2.50	0.90	3.00	0.70	3.50	0.60
2.73	0.80	3.00	0.70	3.50	0.60	4.00	0.50
		3.33	0.60	4.00	0.50	4.50	0.40
				4.63	0.40	5.00	0.30
						5.50	0.25
						5.93	0.20